SALES DRAWING SALES DRAWING SALES DRAWING

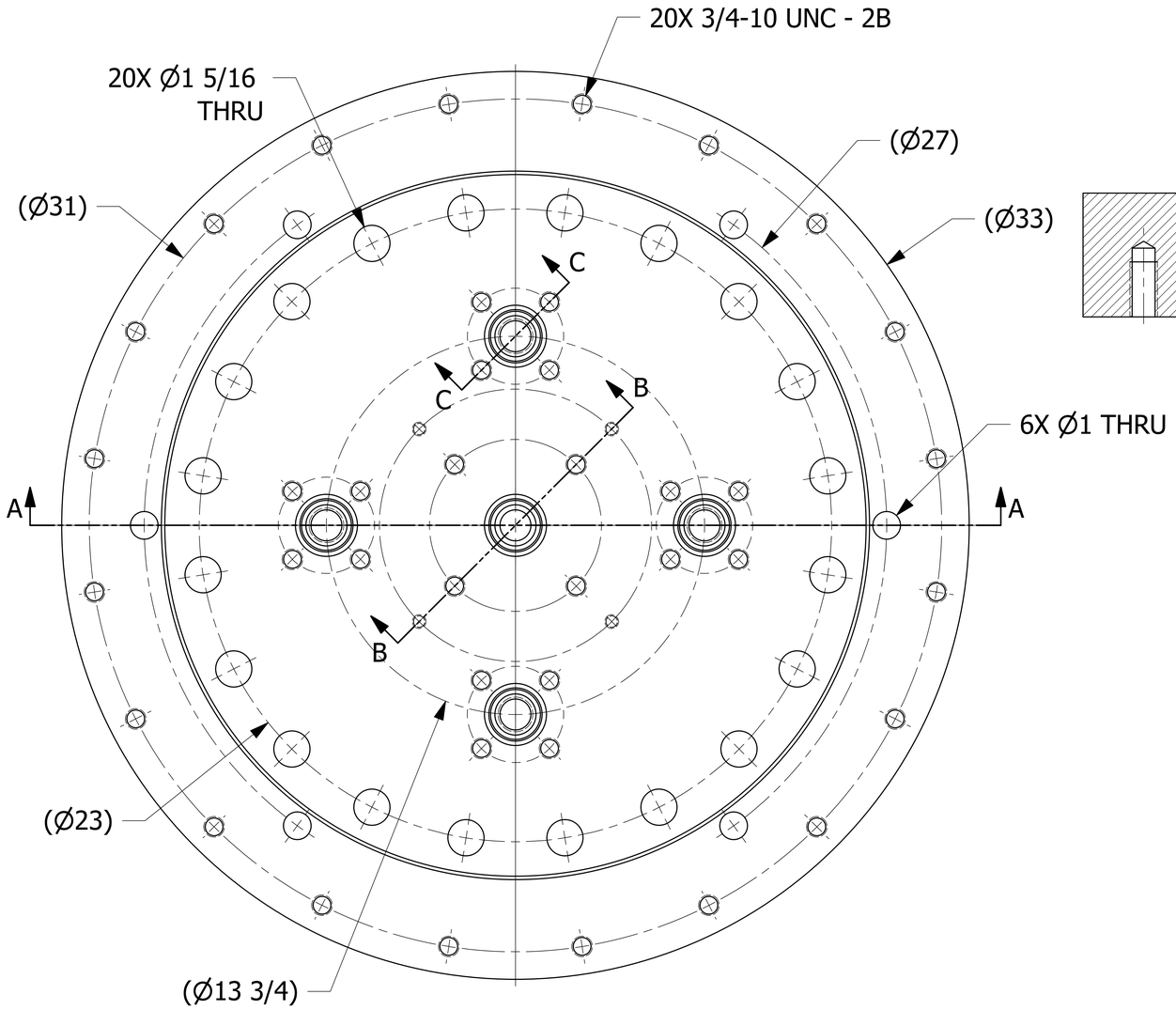

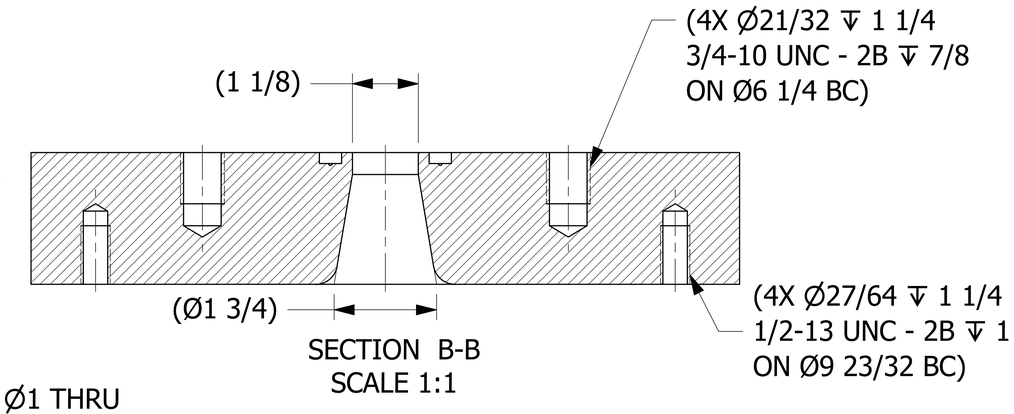

SECTION B-B
SCALE 1:1

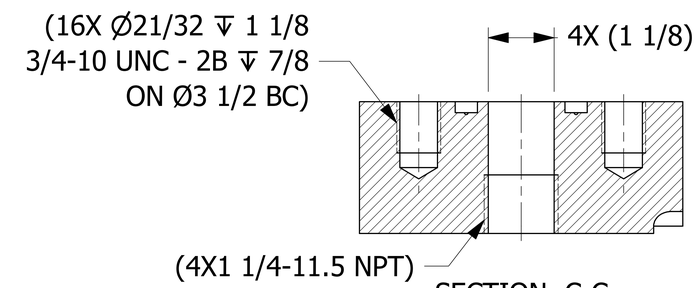

SECTION C-C
SCALE 1:1

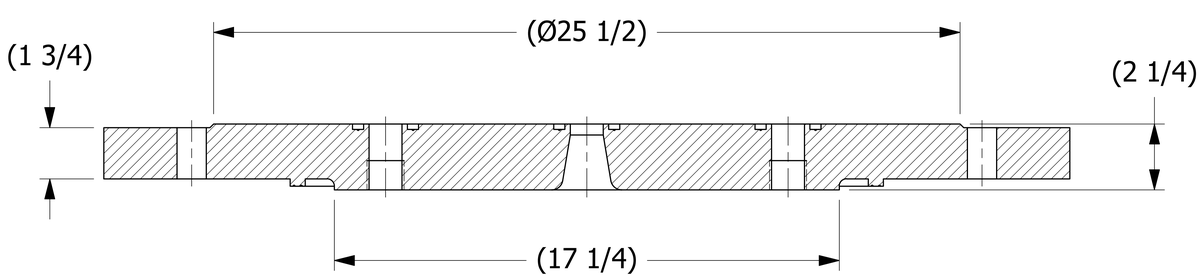

SECTION A-A

REV	BY	DATE	REF #	
E	WEB	10/28/21	202110281119	WEB PUB

UNLESS OTHERWISE SPECIFIED DIMENSIONAL TOLERANCES
FRACTIONAL: ±1/64
X.XX: ±.03
X.XXX: ±.005
ANGULAR: ±2°
DEBURR ALL SHARP EDGES. ALL MACHINED SURFACES TO HAVE A 125 RMS FINISH UNLESS NOTED OTHERWISE.
THIRD ANGLE PROJECTION

DRAWN BY:	CHL
CHECKED BY:	ACC
PROTOTYPE DATE:	6/23/1999
APPROVED FOR PRODUCTION BY:	ACC
PRODUCTION DATE:	6/23/1999
SIZE:	E
DRAWING #:	13164

SALCO PRODUCTS, INC.

PART NAME: PRESSURE PLATE 18" CHLORINE

MATERIAL: ASTM A516-70 NORMALIZED

PROJECT #: 990207 | SHEET #: 1 OF 1 | SCALE: 1:2

PART #: TMC18CPPC1

THIS PRINT, PROPERTY OF SALCO PRODUCTS INC, CONTAINS PROPRIETARY INFORMATION AND MUST NOT BE COPIED, REPRODUCED, OR USED DETRIMENTALLY TO OUR INTEREST.